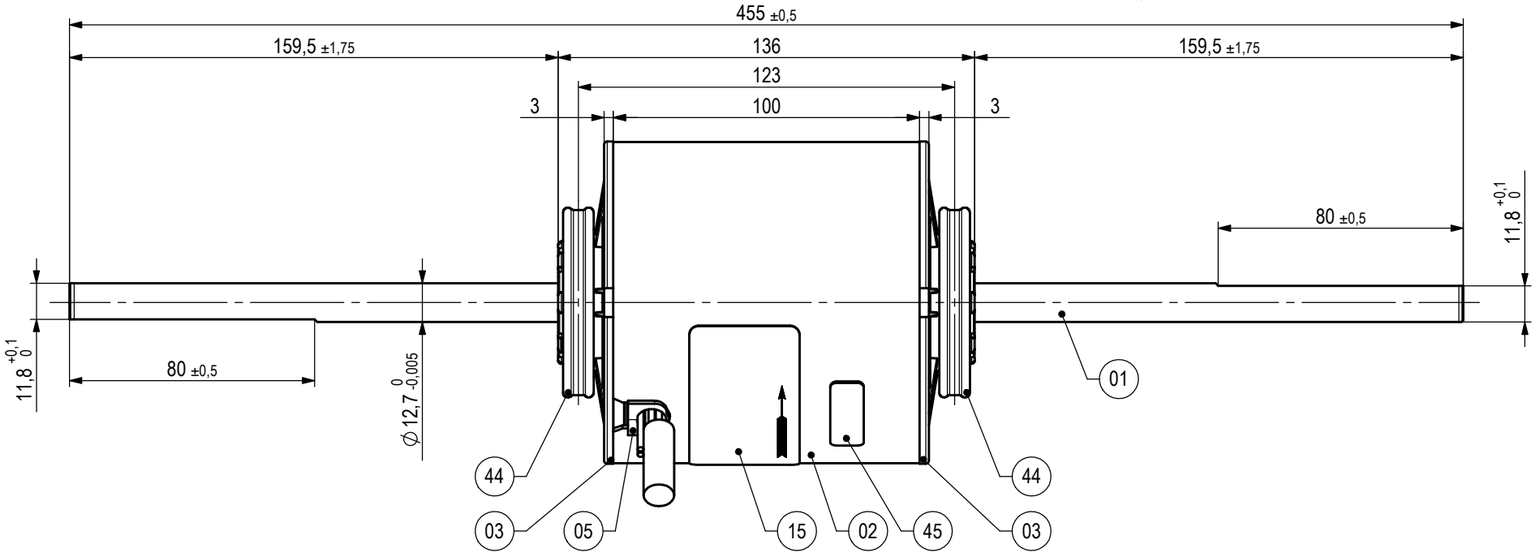

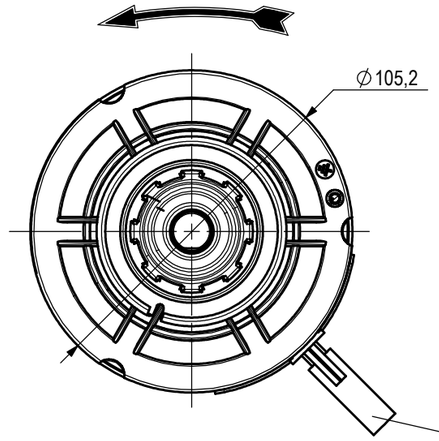

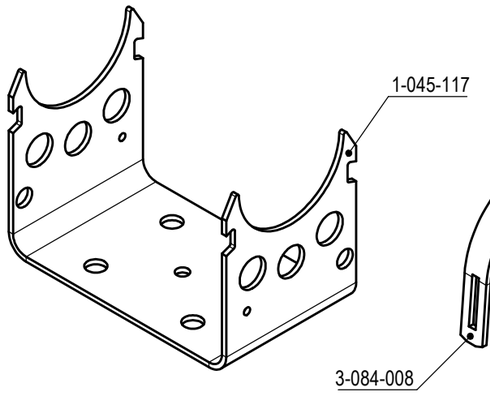

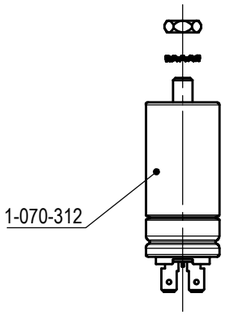

ACCESSORIES
SUPPLIED AND PACKED
WITH THE MOTOR
(Accessori Forniti ed Imballati
con il Motore)

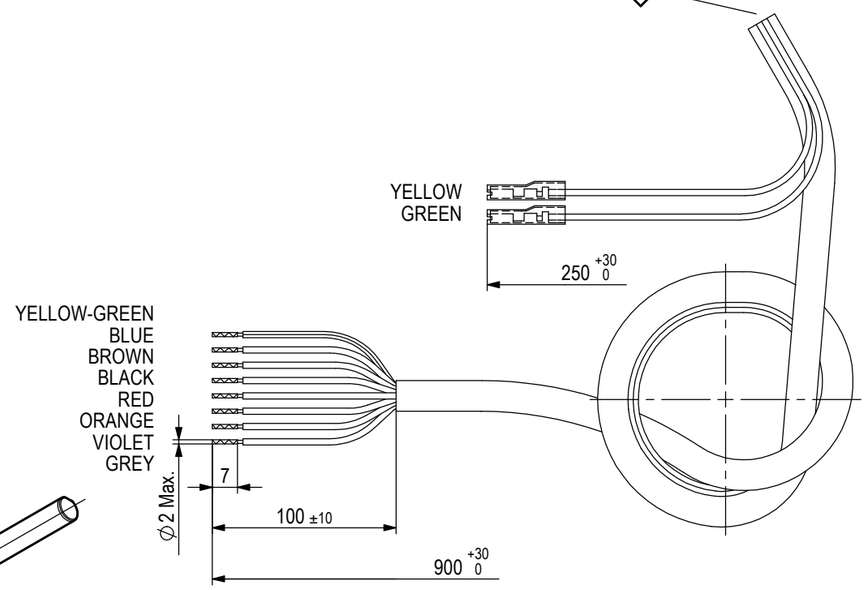

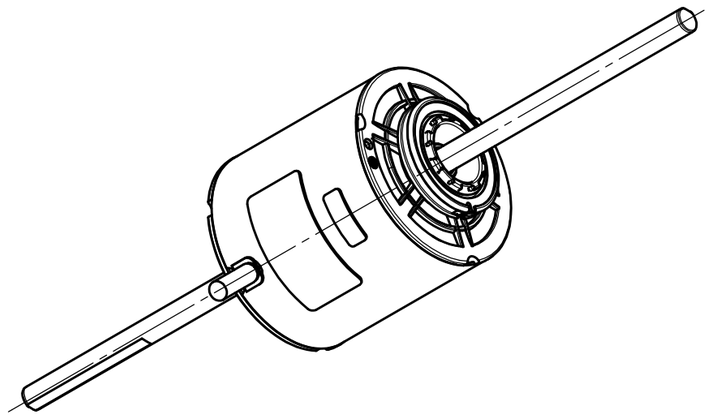

CLASS "B" MOTOR - SLEEVE BEARINGS MANUFACTURED (Motore in classe "B" - Esecuzione a Bronzine)	
AXIAL CLEARANCE (Gioco assiale)	1,0 - 3,5 mm
SHELL (Fascia)	CLOSED (Chiusa)
END SHIELD - LEADS SIDE (Coperchio lato Cavi)	CLOSED (Chiuso)
END SHIELD - OPPOSITE LEADS SIDE (Cop. lato opposto cavi)	CLOSED (Chiuso)
ASSEMBLING SPECIFICATION No. (Normativa per note di montaggio)	EL.UN.0009
MECHANICAL SPECIFICATION No. (Normativa per note di controllo meccanico)	EL.CM.0002
ELECTRICAL SPECIFICATION No. (Controllo elettrico con prescrizione)	M.1498/ 10

15

CODE: RGFB46TB0545
TYPE: 1RG 35-20-6V NA

230V ~ 50Hz 0,45A
34/90W 1100Rpm TH.PROT
INS.CL.B C=2µF 450VL

DATA

BLUE	COMMON
BROWN	MAX-1 VEL
BLACK	2 VEL
GREY	3 VEL
VIOLET	4 VEL
ORANGE	5 VEL
RED	MIN-6 VEL
YELLOW	
GREEN	C
YELLOW/GREEN	

M ~

45

Made in .....

Rel.	Date	Description	Executor signature	Checked
.	.	.	.	.
.	.	.	.	.
.	.	.	.	.
.	.	.	.	.
.	.	.	.	.
.	.	.	.	.

M O D I F I C A T I O N S

For dimension without tollerance see standard UNI EN 22768-mK

Treatement .
Material .

A3

Drawn Pedrini R.
Date 28-06-2018
Check E. Crippa
Scale ---

SINGLE PHASE MOTOR
MOTOR 1 RG 35-20-6V NA
230V 50Hz Th.Prot. CL.B

Weight gr. .
Ref. No 4-010-693
Release -

RGFB46TB0545

DRAWING MADE BY **CAD** HAND MADE MODIFICATIONS ARE FORBIDDEN

THIS DRAWING IS OUR PROPERTY. ANY PARTIAL OR COMPLETE COPY IS FORBIDDEN WITHOUT PREVIOUS WRITTEN AUTHORISATION